5G-PHOS Project: Integrated Fiber-Wireless 5G network technologies for high capacity scenarios

Dr. Konstantinos Filis

Senior R&D Engineer, PhD
COSMOTE - Mobile Telecommunications S.A.
R&D Projects Department - Fixed & Mobile

Wednesday 25 October 2017
Athens, Divani Caravel

Table of Contents

5G-PHOS Overview

- ✓ *8 countries*
- ✓ *16 partners*
  - *2 research centers*
  - *3 operators*
  - *2 equipment vendors*
  - *3 universities*
  - *5 SMEs*
  - *1 football club*

- *EU Funding: 7.85M €*
- *Duration: 9/2017 – 8/2020*
- *Resources: 970 PM*
- *H2020 5G-PPP, GA No. 671551*

Project Coordinator:
N. Pleros, Aristotle University of Thessaloniki, Greece
npleros@csd.auth.gr

Technical Manager:
G. Lyberopoulos, COSMOTE, Greece,
glimperop@cosmote.gr

Aim & Objectives

- **Goal:** 5G-PHOS aims at developing novel 5G broadband fronthaul (FH) architectures, evaluating them for the demanding environments of ultra-dense and hotspot areas and producing a powerful photonic integrated circuit technology toolkit.

- **5G-PHOS will Deliver:**
  - V-band massive MIMO antennas (64x64)
  - fully integrated and tunable 16x1 single- and multi-wavelength optical beamformers
  - the MT-DBA FH resource allocation scheme
  - a FiWi FH Network Planning & Operation tool.
  - Close-to-market solutions

Challenges & Key Concepts

- **Technical and Research Challenges :**
  - Release a cost-effective/energy-efficient ultra-dense FH specification with immediately exploitable commercial perspectives
  - Meet the respective User QoE and System Performance KPI metrics
  - Combine mm-wave wireless radio and massive MIMO antennas to provide increased capacity and link reliability
  - Migrate from CPRI-based schemes towards bandwidth-scalable Ethernet-friendly FH solutions.
- **Key concepts:**
  - Capitalization on novelties of integrated optical technologies (InP transceiver, Triplex optical beamformers and multi-bitrate optical communications) into next generation FH, towards
  - Enhancing Fiber-Wireless (FiWi) convergence and packetized C-RAN FH supporting mm-Wave and massive MIMO.

The 5G-PHOS Solution

5G-PHOS expects to release a seamless, interoperable, RAT-agnostic and SDN-programmable FiWi 5G network that supports 64x64 MIMO antennas in the V-band, offering:

- **Up to 400 Gb/s** in ultra-dense networks, adopting optical Spatial-Division-Multiplexed (SDM) solutions on top of the emerging 25 Gb/s PON infrastructures, delivering a packetized integrated FiWi fronthaul network, and
- **Up to 100 Gb/s** in hotspot areas, showcasing the benefits of WDM technology and packetized fronthauling in private C-RAN solutions.

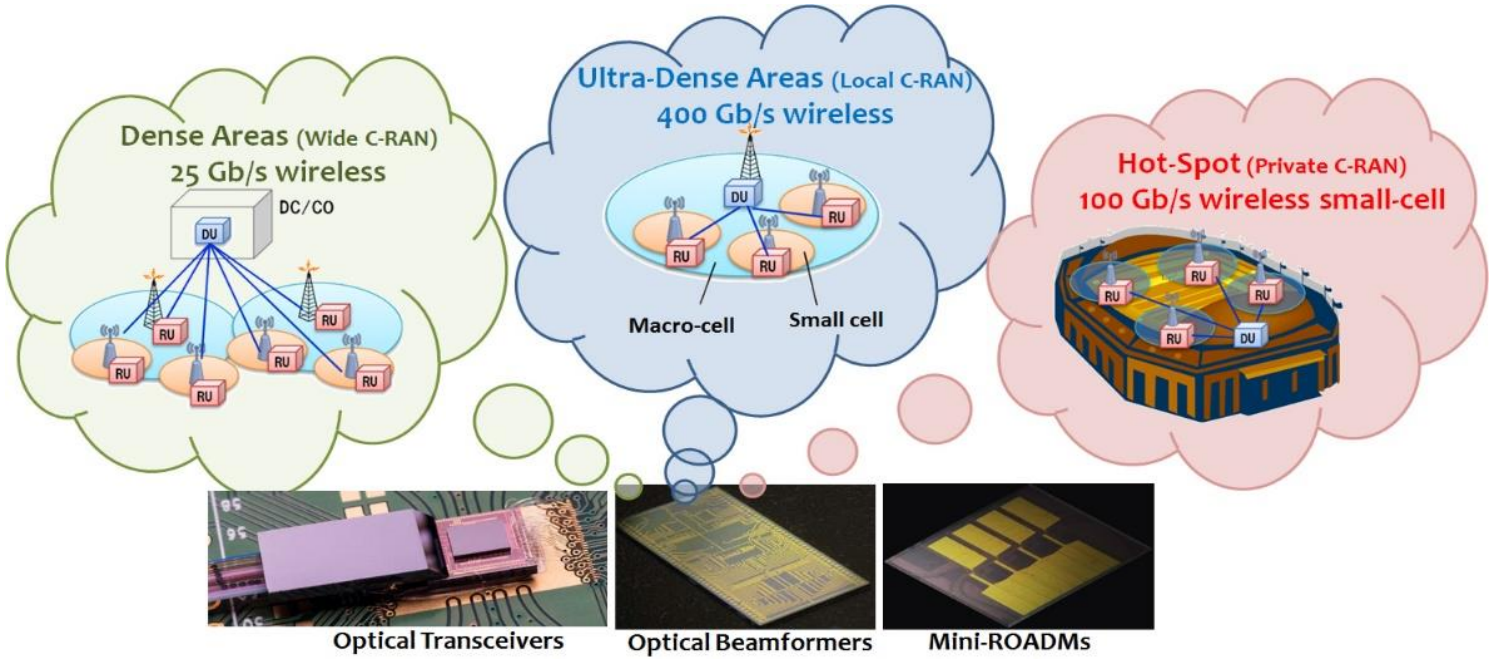

Solution Approach

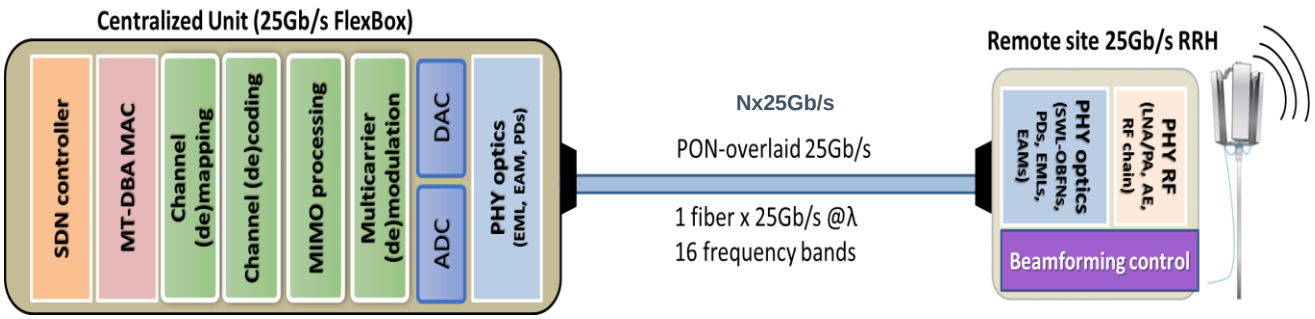

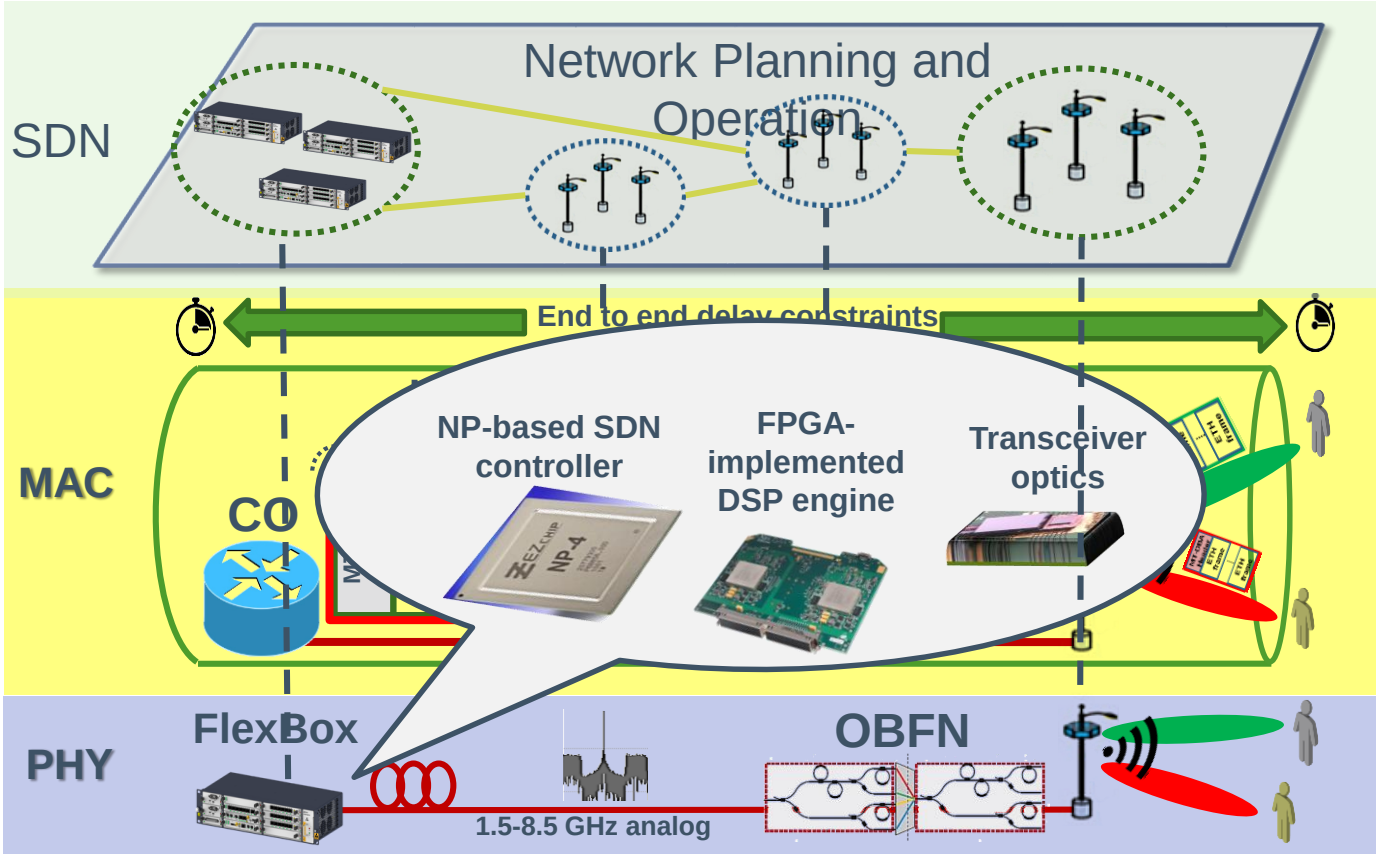

FlexBox family Centralized Units

- ***25 Gb/s FlexBox for 25 Gb/s PON-overlaid networks***

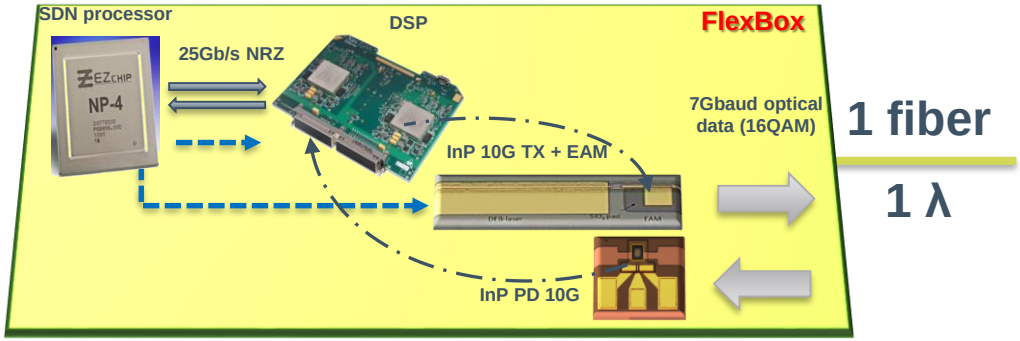

To 25Gb/s V-band MIMO RRH

- ***16x25 Gb/s FlexBox-Pro-SDM for 400 Gb/s p2p SDM FiWi links***

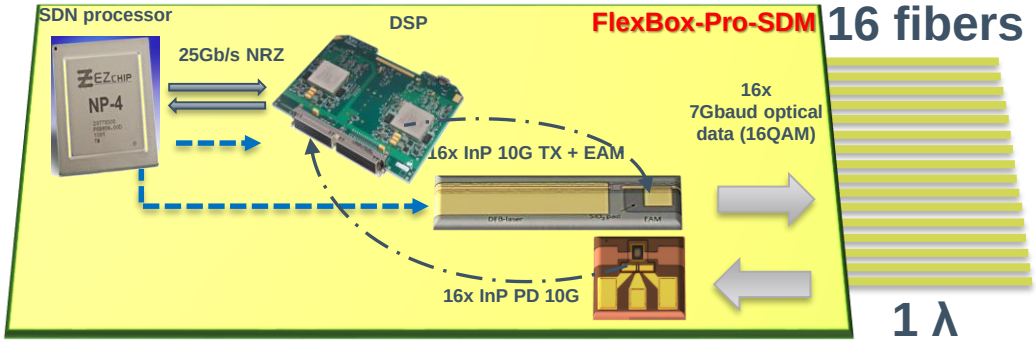

To 400Gb/s V-band MIMO RRH

- ***4x25 Gb/s FlexBox-Pro-WDM for 100 Gb/s TWDM FiWi links***

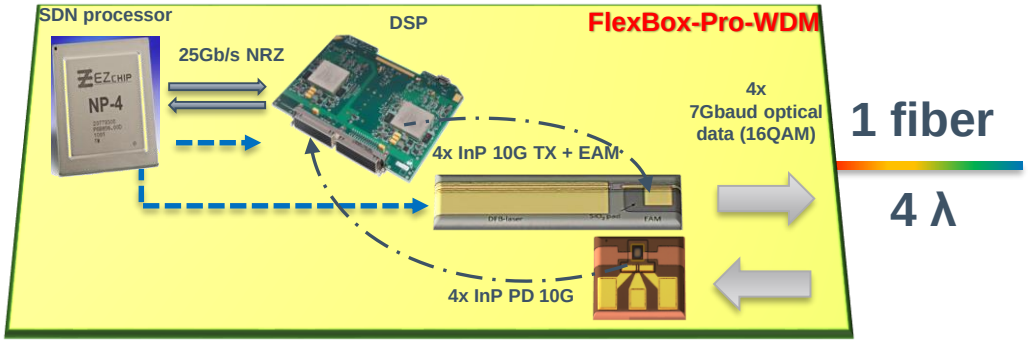

To 100Gb/s V-band MIMO RRH

Validation and Demonstrations

Aim:
Validate 5G-PHOS technologies in a series of scalable lab- and field-trial demonstrators.

Field Trials: **Orange Labs** **P.A.O.K. F.C.**

Expected Impact

- 5G-PHOS will shape new network concepts and will introduce new business models and opportunities converting them into **tangible market outcomes** by its industrial consortium partners.
- 5G-PHOS outcomes will be demonstrated through different network use cases that have **the highest probability to enter first the 5G era**, tailored to serve the 5G network requirements both in performance as well as in business models and economic viability.
- 5G-PHOS is expected to achieve a significant impact on various relevant **standardization groups** by virtue of its substantial technological outputs and time-alignment with 5G standardization and deployment roadmaps.
- 5G-PHOS aims to make a major step forward towards **increasing the economic and social wellbeing of European citizens** by providing its cost-effective, energy-efficient 5G network solutions for high-density use cases.

Thank You!

Project Coordinator:
N. Pleros, Aristotle University of Thessaloniki, Greece
npleros@csd.auth.gr

Technical Manager:
G. Lyberopoulos, COSMOTE, Greece,
glimperop@cosmote.gr